INT69® UY Diagnose

INT69 UY Diagnose

Illustration similar. Scope of delivery may deviate.

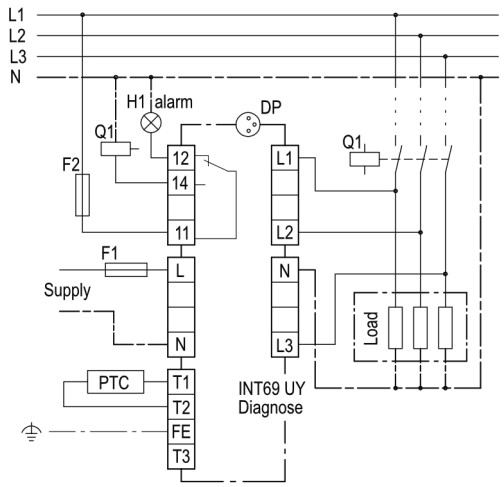

Wiring diagram

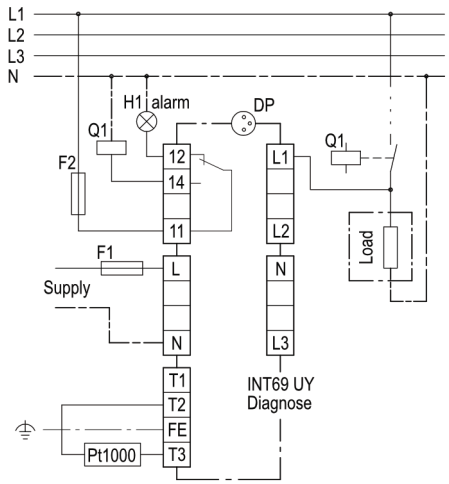

Wiring diagram

Application

The INT69 UY Diagnose voltage monitor diagnostics is a further development of the established KRIWAN voltage monitors.

It is used everywhere that impermissible voltages or an incorrect phase sequence can cause damage or prevent proper functioning of the monitored system.

Functional description

The INT69 UY Diagnose is suitable for monitoring both a 3-phase network and a 1-phase network. In the delivery state, the monitoring is set for 3-phase networks.

If the monitoring is configured to 1-phase network operation, the connection of the mains voltage must be via L1 and FE.

The phase failure as well as under- and overvoltage are always monitored.

Monitoring of the phase asymmetry, the correct phase sequence, and for neutral conductor breakage only happens for 3-phase networks.

The correct phase sequence is monitored when applying the network for a duration that can be set.

If there is an incorrect phase sequence, the voltage monitor switches off in a locked state.

Switch-off also occurs for phase asymmetry or failure, as well as for under or overvoltage.

A warning is issued in case of a neutral conductor breakage. In order to detect a neutral conductor breakage, a phase asymmetry needs to be present, connection N of the INT69 UY Diagnose needs to be connected to connection terminal N of the machine, and monitoring has to be active.

In order to guarantee the function of the INT69 UY Diagnose, the functional earth must be connected.

The additional temperature monitoring takes place according to the static evaluation method of a PTC or a PT1000.

The monitoring of the PTC switches off without delay if the temperature limit is reached.

The monitoring of the PT1000 switches off when the settable temperature limit is reached after the settable activation delay.

The temperature monitoring is deactivated in the delivery state. If a sensor is connected, the monitoring of this sensor is activated.

For deactivation or for changing the sensor, it is necessary to configure the sensor setting per parameter.

The INT69 UY Diagnose monitors the given module and supply voltage and generates a warning via the diagnostics interface as soon as this sinks beneath a specified limit value.

If a limit for the associated activation delay time is continually exceeded or fallen below, the voltage monitor switches off.

After rectifying the error and subsequent reset delay, the system is switched on again.

Restart after a lock-out is only possible after a reset.

Settable parameters (see parameter table) can be set via the diagnostics port with the help of the INTspector app, and with separately available accessories.

The integrated LED signals the current status of the voltage monitor (see blink code).

Only the output relay is galvanically isolated.

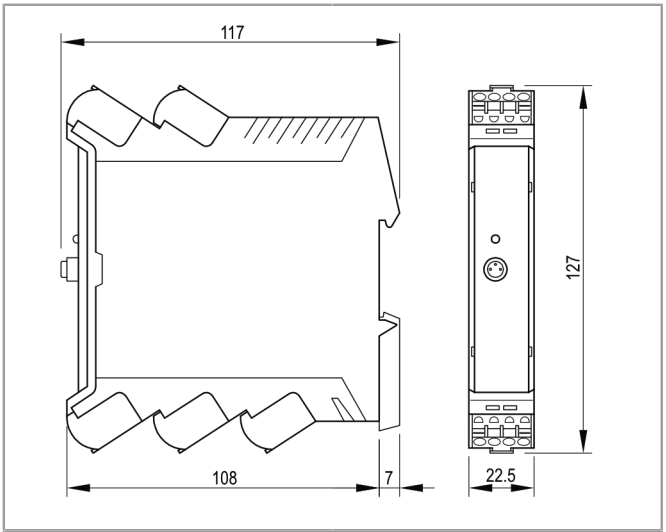

Dimensions in mm

Safety instructions

Installation, maintenance, and operation are to be carried out by an electrician.

The applicable European and national standards for connecting electrical equipment must be observed.

Connected sensors and connection lines that extend from the switching cabinet must feature at least a basic insulation.

Order data

INT69 UY Diagnose	**52 A 735 P080**
Further product information	See www.kriwan.com

Blink code

The KRIWAN blink code enables fast and simple status display and troubleshooting.

The blink code consists of a cyclical blinking sequence. In the event of an error, the blinking sequence consists of red and orange pulses. If warnings are pending, the sequence consists of green and orange pulses. The current status can be determined from the number of blinking pulses.

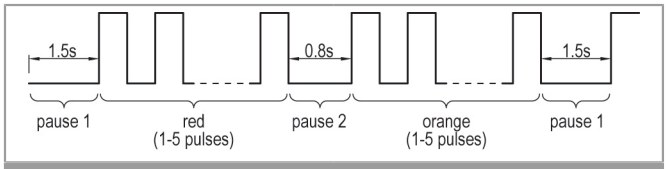

Blink code

Overview of blink code

Green lit	Machine ready for operation
Green blinking	Machine running
Green / Orange blinking	Warning, machine in critical range, for description see below
Red / Orange blinking	Error, machine is switched-off, for description see below

1. Flashing sequence (LED red error, LED green warning)	2. Blinking sequence (LED orange)	Description
1	1	Temperature monitoring: Static switch-off, permissible temperature exceeded
1	4	Temperature monitoring: Sensor input detected open circuit
2	1	Phase monitoring: Incorrect phase sequence
2	2	Phase monitoring: Phase failure/asymmetry
2	3	Phase monitoring: Undervoltage/overvoltage
2	4	Phase monitoring: Reset delay after "phase monitoring" error
2	5	Phase monitoring: Neutral conductor breakage
3	1	General: Supply voltage too low
3	3	General: Internal error

Technical specifications

Supply voltage	AC 50/60 Hz 230 V ±10 % 3 VA
Permissible ambient temperature T_A	-30...+70 °C
Temperature measuring circuit – Type – $R_{25, total}$ – $R_{activate, static}$ – R_{reset} – Max. length of connection line	 1-2 AMS sensors in series alternative 1-9 PTC sensors according to DIN 44081, DIN 44082 in series <1.8 kΩ 4.5 kΩ ±20 % 2.75 kΩ ±20 % 10 m
Temperature measuring circuit – Type – Measuring range – Resolution – Accuracy – Max. length of connection line	 Pt1000 -50… +300 °C 1 K 5% of measuring range maximum value 10 m
PTC and PT1000 short circuit monitoring	Typical <30 Ω
Open circuit monitoring – PTC – Pt1000	 20 kΩ 3 kΩ
Mains voltage monitoring – Monitoring range – Accuracy	 AC 50/60 Hz, 150-690 V ±10 % ±2.5 % of monitoring range
Operation with frequency converter	Not suitable
Reset delay – Temperature measuring circuit	 Not delayed
Reset of the lock or the reset delay	Power reset >5 s only possible when error no longer present
Measuring accuracies of all not individually tolerated times	±10 %
Relay – Contact – Mechanical service life	 AC 240 V 2.5 A C300 Mind. AC/DC 24 V 20 mA Approx. 1 million switching operations
Interface	Diagnostics port (DP)
Protection class according to EN 60529	IP20
Connection type	Push-in spring terminals, 0.2–2.5 mm²
Housing material	PA glass-fiber reinforced
Mounting	Can be snapped onto 35 mm DIN rail according to EN 60715
Dimensions	See dimensions in mm
Weight	Approx. 250 g
Testing basis	EN 61000-6-2, EN 61000-6-3 EN 61010-1 Overvoltage category III (observe insulation of the temperature sensor) Pollution level 2

Approval	UL file no. E473026 $_cUR_{us}$ Operating control

Parameter table

Parameter name	Adjustment range	Default	Unit
Temperature measuring circuit			
– Operating mode	automatic/deactivated; Pt1000; PTC	automatic/deactivated;	
– Switch-off temperature	-50...300	60	°C
– Warning temperature	-50...300	50	°C
– Hysteresis temperature	0...300	20	°C
– Line correction	0...100	0	ohm
Phase monitor 1			
– Phase monitor	deactivated; 3-phase; 1-phase	3-phase	
– Operating mode	motor protection; mains monitor	mains monitor	
– Type of voltage measurement	Phase-N; Phase-Phase	Phase-N	
– Phase asymmetry active	deactivated; active	active	
– N-lead monitoring	deactivated; active	deactivated	
– Phase failure switch-off value	0...100	75	%
– Phase failure reset delay	00:00:01...18:12:14; locked	00:00:03	hh:mm:ss
– Phase sequence operating mode	active; deactivated	Active	
– Phase asymmetry switch-off value	1...100	15	%
– Phase asymmetry warning value	1...100	10	%
– Phase asymmetry hysteresis	1...99	5	%
– Phase asymmetry activation delay	0,06...360	0,4	s
– Phase asymmetry reset delay	00:00:01...18:12:14; locked	00:00:03	s
Undervoltage phase			
– Undervoltage operating mode	deactivated; limit 1 warning; limit 1 switch-off	limit 1 warning;	
– Undervoltage limit 1	100...690	207	V
– Undervoltage limit 2	100...690	195	V
– Undervoltage hysteresis	1...200	15	V
– Undervoltage limit 1 activation delay	0,06...360	0,06	s
– Undervoltage limit 2 activation delay	0,06...360	0,06	s
– Undervoltage reset delay	00:00:01...18:12:14; locked	00:00:03	hh:mm:ss
Overvoltage phase			
– Overvoltage operating mode	deactivated; limit 1 warning; limit 1 switch-off	limit 1 warning;	
– Overvoltage limit 1	100...690	253	V
– Overvoltage limit 2	100...690	265	V
– Overvoltage hysteresis	1...200	15	V
– Overvoltage limit 1 activation delay	0,06...360	0,06	s
– Overvoltage limit 2 activation delay	0,06...360	0,06	s
– Overvoltage reset delay	00:00:01...18:12:14; locked	00:00:03	hh:mm:ss
INTspection Memory ranges			
– Basic time grid, range 1	1...3600	1	s
– Time factor, range 2	1...3600	60	
– Time factor, range 3	1...3600	60	
– INTspection memory error offset	1...100	100	
INTspection Memory accumulation of value			
– Value 1 phase L1	minimum; average; maximum	maximum	
– Value 2 phase L2	minimum; average; maximum	maximum	
– Value 3 phase L3	minimum; average; maximum	maximum	
– Value 4 phase L1	minimum; average; maximum	minimum	
– Value 5 phase L2	minimum; average; maximum	minimum	
– Value 6 phase L3	minimum; average; maximum	minimum	
– Value 7 frequency	minimum; average; maximum	average	

KRIWAN Industrie-Elektronik GmbH

Allmand 11
74670 Forchtenberg phone: (+49) 7947 822 0 info@kriwan.com
Deutschland fax: (+49) 7947 1288 www.kriwan.com