INT69® YF Diagnose

INT69 YF Diagnose

Illustration similar. Scope of delivery may deviate.

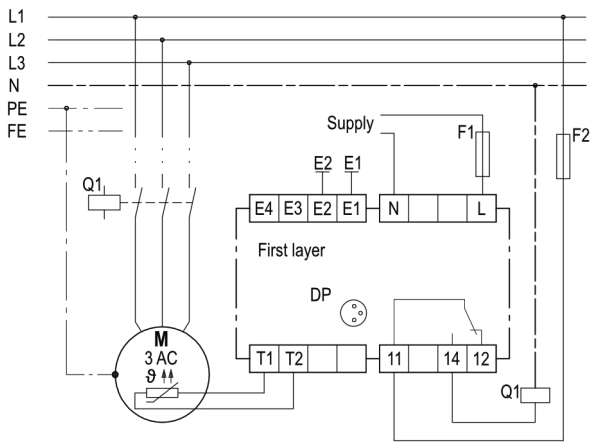

Wiring diagram

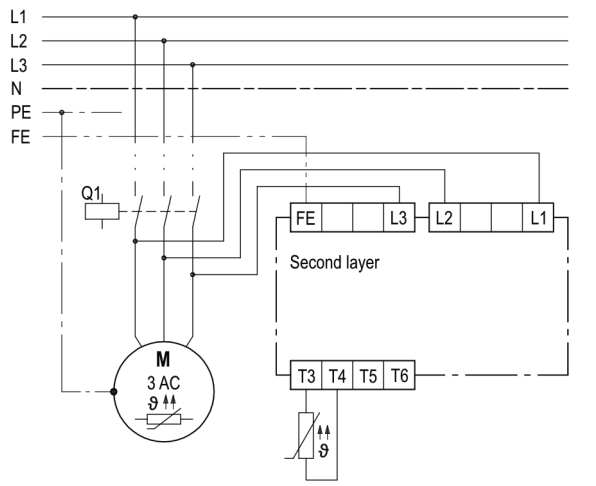

Wiring diagram

Application

The motor protector INT69 YF Diagnose is a universal and versatile protection unit. For the monitoring of electrical components, various inputs for temperature, voltage, leakage/resistance measurement and analog signals are available in a single module. Protective functions and behavior can be flexibly adjusted to the application by parameterization.

The INT69 YF Diagnose saves operating and error data in a non-volatile memory. This data can be read and evaluated for diagnosis.

This motor protector is mainly used for protecting pumps.

Functional description

All monitoring functions can be configured by simple parameterization via the app. The following operating statuses of the inputs are described as active, but can be deactivated via parameterization.

The temperature monitoring takes place according to the static evaluation process of a PTC, a Pt100 or a Pt1000. The monitoring of a PTC sensor switches off the alarm relay immediately when the nominal response temperature is reached. The monitoring of a Pt100 and Pt1000 switches the alarm relay when the adjustable temperature limits are reached, after the adjustable activation delay has elapsed.

A short circuit or an open circuit at a temperature input also causes a switch-off of the alarm relay.

The temperature monitoring of the motor winding can also take place according to the static evaluation process of a bimetal switch; when the bimetal switch opens, the alarm relay is switched off without delay.

The phase monitoring of the motor voltage is active from 6 s after the start of the motor.

The correct phase sequence is monitored for 5 s. Phase failure, phase asymmetry, under- and overvoltage are monitored during the entire motor running time.

If there is an incorrect phase sequence, the motor protector switches off in a locked state.

The alarm relay also switches off in the event of phase asymmetry or failure, and also in the event of undervoltage or overvoltage after the adjustable limits have been reached and after the adjustable activation delay has elapsed.

The phase monitoring and run detection are deactivated for approx. 2 s after motor stop in order to prevent unwanted locking caused by temporary reverse running of the machine.

The leakage monitoring takes place according to the static evaluation process of an ohmic resistor.

The monitoring of an ohmic resistance switches off the alarm relay when the adjustable limits are reached, after the adjustable activation delay has elapsed.

The switching frequency monitoring records switching operations per time range.

When the adjustable number of switching operations within the adjustable time range is exceeded, the alarm relay is switched off.

The INT69 YF Diagnose monitors the given module and supply voltage and generates a warning via the diagnostics interface as soon as this sinks beneath a specified limit value.

After rectifying the error and subsequent reset delay, the system is switched on again.

Restart after a lock-out is only possible after a reset.

Settable parameters (see parameter table) can be set via the diagnostics port with the help of the INTspector app, and with separately available accessories.

The integrated LED signals the current status of the voltage monitor (see blink code).

In case of error-free operation, the built-in LED lights up green. The alarm relay energizes. If an error or is detected, the alarm

relay is deactivated. The output relay operates in closed-circuit current mode.

The INT69 YF Diagnose has a service interval function. The adjustable interval time is activated when the service interval is restarted. After the time has elapsed, the service is signalized via the built-in LED.

The INTspection memory records all measured values for the adjustable time range. If an error occurs, the measured values are made available for the time range during, before and after the time of the error.

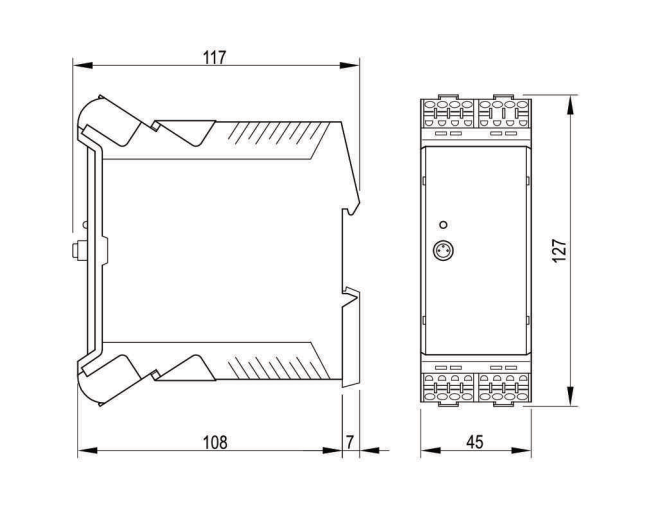

Dimensions in mm

Safety instructions

Installation, maintenance, and operation are to be carried out by an electrician.

The applicable European and national standards for connecting electrical equipment and refrigeration systems must be observed.

Connected sensors and connection lines that extend from the switching cabinet must feature at least a basic insulation.

The circuit in which the buttons are located does not have a secure electrical isolation from the circuits with dangerous voltages, rather is only separated by a basic insulation.
To achieve the specified overvoltage category, sensors must have at least double insulation in the motor winding.

Order data

INT69 YF Diagnose	**22 A 700 P081**
Further product information	See www.kriwan.com

Blink code

The KRIWAN blink code enables fast and simple status display and troubleshooting.

The blink code consists of a cyclical red and orange blinking sequence. The current status can be determined from the number of blinking pulses.

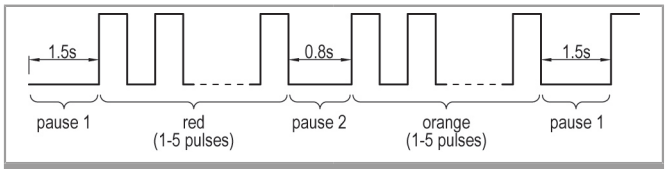

Blink code

Overview of blink code

Green lit	Machine ready for operation
Green blinking	Machine running
Orange lit	Machine ready for operation, service elapsed
Orange flashing	Machine running, service elapsed
Green / Orange blinking	Warning, machine in critical range, for description see below
Red / Orange blinking	Error, machine is switched-off, for description see below

1. Flashing sequence (LED red error, LED green warning)	2. Blinking sequence (LED orange)	Description
1	1	Motor temperature: Static switch-off, permissible winding temperature exceeded
1	4	Motor temperature: Sensor input detected open circuit or short circuit
2	1	Phase monitoring: Incorrect phase sequence
2	2	Phase monitoring: Phase failure/asymmetry
2	3	Phase monitoring: Undervoltage/overvoltage
3	1	Temperature input 1: Static switch-off / warning, permissible temperature exceeded
3	2	Temperature input 2: Static switch-off / warning, permissible temperature exceeded
3	4	Temperature input 1: Sensor input detected open circuit or short circuit
3	5	Temperature input 2: Sensor input detected open circuit or short circuit
4	1	Leakage 1: Static switch-off / warning, permissible limit value undercut / exceeded

1. Flashing sequence (LED red error, LED green warning)	2. Blinking sequence (LED orange)	Description
4	3	Leakage 2: Static switch-off / warning, permissible limit value undercut / exceeded
5	1	General: Internal error
5	2	General: Supply voltage too low
5	5	General: Switching frequency static warning, permissible switching operations exceeded

Technical specifications

Supply voltage	AC 50/60 Hz 100-240 V ±10 % 9 VA
Permissible ambient temperature T_A	-30...+70 °C
Temperature measuring circuit – Type – $R_{25, total}$ – $R_{activate, static}$ – R_{reset} – Max. length of connection line – Short circuit monitoring – Open circuit monitoring	 1-2 AMS sensors in series alternative 1-9 PTC sensors according to DIN 44081, DIN 44082 in series <1.8 kΩ 4.5 kΩ ±20 % 2.75 kΩ ±20 % 30 m <20 Ω >20 kΩ
Temperature measuring circuit – Type – Measuring range – Resolution – Accuracy – Short circuit monitoring – Open circuit monitoring	 Pt100 -50… +300 °C 1 K 5% of measuring range maximum value <20 Ω >400 Ω
Temperature measuring circuit – Type – Measuring range – Resolution – Accuracy – Short circuit monitoring – Open circuit monitoring	 Pt1000 -50… +300 °C 1 K 5% of measuring range maximum value <20 Ω >400 Ω
Switching input – Type – Contact suitable for – Max. length of connection line	 Potential-free switch (digital input) DC 24 V, 20 mA 30 m
Leakage measuring circuit – Type – Measuring range – Resolution – Accuracy	 Resistance measurement between electrode pair 10 k…1 MΩ 1 kΩ ±10% of measuring range maximum value within range 10 k…100 kΩ ±25% of measuring range maximum value within range 101 k…1 MΩ
Phase monitoring – Operation with frequency converter – Measuring range phase-phase – Operating frequency range – Typ. operating frequency – min. time for detection – Monitoring options	 Suitable 3 AC 20…100 Hz 100…690 V ±10% 1…16 kHz 8 kHz 100 ms Phase sequence, phase failure, phase asymmetry, undervoltage and overvoltage
Switching frequency monitoring	Switching operations per time unit, configurable
Switch-off limits, general	Configurable unless specified otherwise
Reset delay	Configurable
Reset of the lock or the reset delay	Power reset >5 s only possible when error no longer present
Relay – Contact – Mechanical service life	 AC 240 V 2.5 A C300 Mind. AC/DC 24 V 20 mA Approx. 1 million switching operations
Interface	Diagnostics port (DP)
Protection class according to EN 60529	IP20
Connection type	Tension spring connection (PUSH-IN) 0.2…2.5 mm²
Housing material	PA 66 GF 30
Mounting	Switching cabinet housing (basic grid 45 mm), can be snapped onto 35 mm standard rail according to EN 60715
Dimensions	See dimensions in mm
Weight	Approx. 300 g
Testing basis	EN 61000-6-2, EN 61000-6-3 EN 61010-1 Overvoltage category III (observe insulation of the temperature sensor) Pollution level 2
Approval	UL file no. E473026 $_{c}UR_{us}$

Parameter table

Parameter name	Adjustment range	Default	Unit
Motor temperature 1			
– Sensor type	deactivated; PT100; Pt1000; PTC; bimetal	PT100	
– Switch-off temperature	-100...300	140	°C
– Warning temperature	-100...300	110	°C
– Hysteresis	0...300	30	K
– Activation delay	0,1...3600	0.1	s
– Reset delay	00:00:01...18:12:14; locked	locked	hh:mm:ss
– Line correction	0...100	0	Ω
Temperature 1			
– Switch-off temperature	-100...300	60	°C
– Warning temperature	-100...300	40	°C
– Hysteresis	0...300	10	K
– Activation delay	0,1...3600	0.1	s
– Reset delay	00:00:01...18:12:14; locked	Locked	hh:mm:ss
– Line correction	0...100	0	Ω
Temperature 2			
– Sensor type	deactivated; PT100; Pt1000; PTC	deactivated	
– Switch-off temperature	-100...300	60	°C
– Warning temperature	-100...300	40	°C
– Hysteresis	0...300	10	K
– Activation delay	0,1...3600	0.1	s
– Reset delay	00:00:01...18:12:14; locked	Locked	hh:mm:ss
– Line correction	0...100	0	Ω
Leakage 1			
– Operating mode	deactivated; resistance exceeded; resistance undercut;	resistance undercut	
– Switch-off value	1...1000	50	kΩ
– Warning value	1...1000	70	kΩ
– Hysteresis	1...999	10	kΩ
– Activation delay	0,1...3600	0.5	s
– Reset delay	00:00:01...18:12:14; locked	Locked	hh:mm:ss
Leakage 2			
– Operating mode	deactivated; resistance exceeded; resistance undercut;	deactivated	
– Switch-off value	10...1000	50	kΩ
– Warning value	0...1000	70	kΩ
– Hysteresis	10...999	10	kΩ
– Activation delay	0,1...3600	0.5	s
– Reset delay	00:00:01...18:12:14; locked	Locked	hh:mm:ss

Parameter name	Adjustment range	Default	Unit
Phase monitor 1			
– Phase monitor operating mode	active; deactivated	active	
– Voltage referencing	Phase-Neutral Phase-Phase	Phase-Neutral	
– Phase failure switch-off value	0...100	75	%
– Phase failure reset delay	00:00:01...18:12:14; locked	locked	hh:mm:ss
– Phase sequence operating mode	active; deactivated	Active	
– Phase asymmetry switch-off value	1...100	75	%
– Phase asymmetry warning value	1...100	10	%
– Phase asymmetry hysteresis	1...99	5	%
– Phase asymmetry activation delay	0,1...360	0.3	s
– Phase asymmetry reset delay	00:00:01...18:12:14; locked	locked	s
Undervoltage phase			
– Undervoltage operating mode	deactivated; limit 1 warning; limit 1 switch-off	deactivated	
– Undervoltage limit 1	100...690	207	V
– Undervoltage limit 2	100...690	195	V
– Undervoltage hysteresis	1...600	20	V
– Undervoltage limit 1 activation delay	0,1...360	3.0	s
– Undervoltage limit 2 activation delay	0,1...360	3.0	s
– Undervoltage reset delay	00:00:01...18:12:14; locked	locked	hh:mm:ss
Overvoltage phase			
– Overvoltage operating mode	deactivated; limit 1 warning; limit 1 switch-off	limit 1 warning	
– Overvoltage limit 1	0,1...690	253	V
– Overvoltage limit 2	100...690	265	V
– Overvoltage hysteresis	1...600	20	V
– Overvoltage limit 1 activation delay	1...360	3.0	s
– Overvoltage limit 2 activation delay	0,1...360	3.0	s
– Overvoltage reset delay	00:00:01...18:12:14; locked	locked	hh:mm:ss
Switching frequency			
– Operating mode	deactivated; warning; alarm	deactivated	
– Reset delay	00:00:01...18:12:14; locked	Locked	hh:mm:ss
– Switching per time range	2...10	3	
– Time range	1...43200	30	s
INTspection Memory ranges			
– Basic time grid, range 1	1...3600	1	s
– Time factor, range 2	1...3600	60	
– Time factor, range 3	1...3600	60	
– INTspection memory error offset	1...100	100	
INTspection Memory accumulation of value			
– Value 1 phase L1	minimum; average; maximum	average	
– Value 2 phase L2	minimum; average; maximum	average	
– Value 3 phase L3	minimum; average; maximum	average	
– Value 4 frequency	minimum; average; maximum	average	
– Value 5 motor sensor	minimum; average; maximum	average	
– Value 6 temperature sensor 1	minimum; average; maximum	average	
– Value 7 temperature sensor 2	minimum; average; maximum	average	
– Value 8 leakage 1	minimum; average; maximum	average	
– Value 9 leakage 2	minimum; average; maximum	average	
– Value 10 analog input	minimum; average; maximum	average	

KRIWAN Industrie-Elektronik GmbH

Allmand 11
74670 Forchtenberg phone: (+49) 7947 822 0 info@kriwan.com
Deutschland fax: (+49) 7947 1288 www.kriwan.com